SPIRIT+ Medical

ISO 13485:2016

INSTRUCTION MANUAL

For THERMALITE® Heated CPAP Tubing
for Philips Respironics DreamStation and
DreamStation 2

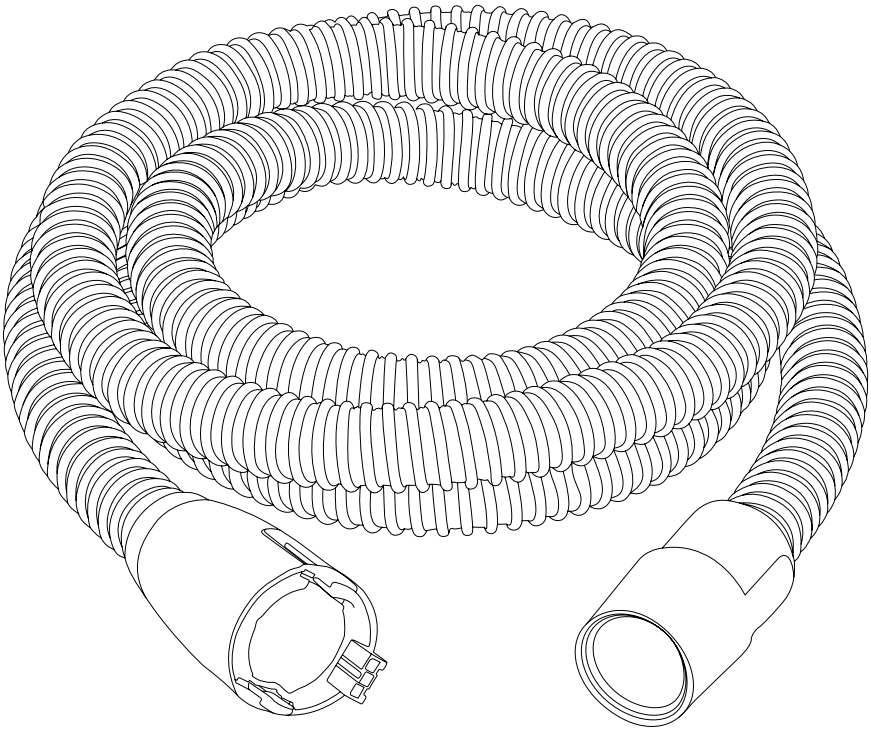

PART NUMBER: **CTUB06H15DS-2W**

INSTRUCTIONS

THERMALITE® HEATED CPAP TUBING FOR PHILIPS RESPIRONICS DREAMSTATION AND DREAMSTATION 2 HEATED HUMIDIFERS.

The Exceleron Medical, LLC THERMALITE® is a heated wire breathing tube developed to be compatible with the Philips Respironics DreamStation CPAP machines. THERMALITE®'s unique design helps prevent condensate from forming within the CPAP heated air stream during CPAP therapy. This condition of condensation is commonly known as "rainout" and is usually the result of temperature and humidity differentials between the device versus the surrounding air. When attached to the Respironics DreamStation and Dreamstation 2 CPAP machines, the THERMALITE® heated CPAP tubing device helps prevent this rainout by controlling the airflow temperature, creating an environment to maintain water in its vapor form. The THERMALITE® heated CPAP tube when used in line on the Philips Respironics DreamStation and DreamStation 2 humidifers helps keep moisture droplets in the air stream and not on your nose, face and mouth, making your CPAP experience more comfortable.

TABLE OF CONTENTS:

1.0 THERMALITE® CPAP Tubing awareness
- 1.1 Components
- 1.2 Indications for Use
- 1.3 Warnings and Contra-Indications

2.0 Use, Cleaning, and Maintenance
- 2.1 User Instructions
- 2.2 Cleaning and Disinfection Process
  - 2.2.1 Home Cleaning and Disinfection Process
  - 2.2.2 Institutional Cleaning and Disinfection Procedure
- 2.3 Troubleshooting

3.0 Specifications and Additional Specifications
- 3.1 Storage and Transport Environment
- 3.2 Operation Environment
- 3.3 Questions and Answers
- 3.4 Part Replacement
- 3.5 Device Specifications
- 3.6 Compliance with Standards
- 3.7 Warranty
- 3.8 Electromagnetic Compatibility
- 3.9 Glossary of Symbols

1.0 THERMALITE® CPAP TUBING USEFUL THINGS TO KNOW

1.1 Components

1. Machine end connector shell
2. Electrical connector
3. Release tabs
4. Mask end fitting/cuff
5. Heated Flexible Tubing

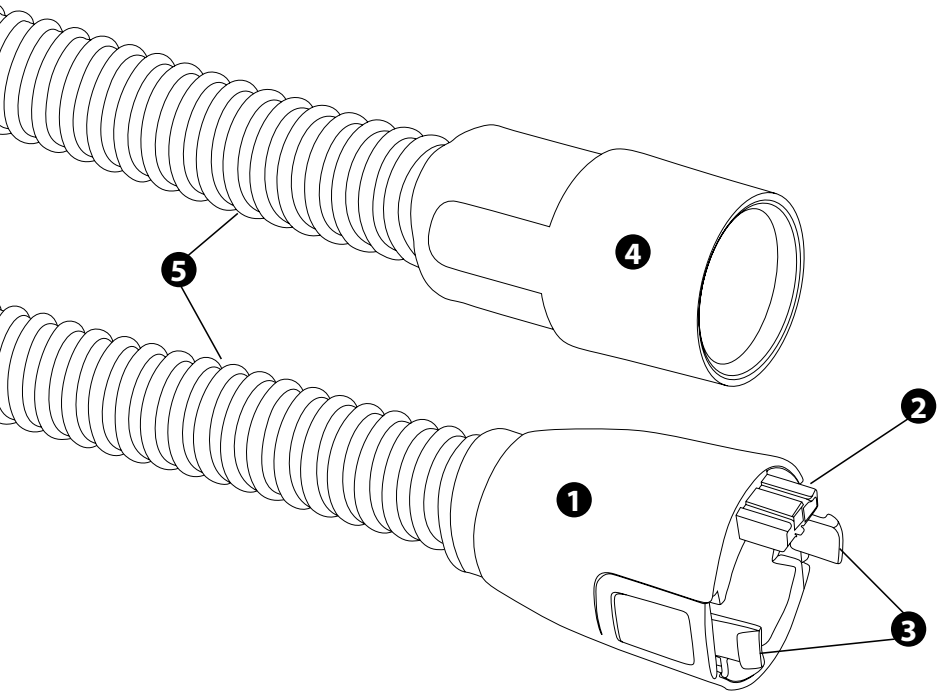

1.2 Indications For Use

The THERMALITE® CPAP Heated Tubing is a heated wire breathing tube intended to provide warmed and/or humidified breathing gases before they enter a patient's airway. It is indicated for single-patient reuse in the home and in clinical settings, such as hospitals, institutions, sleep laboratories, and sub-acute care facilities. It may be used with non-invasive ventilation for adult patients. It is compatible with the Philips Respironics DreamStation and DreamStation 2 heated humidifiers.

Federal law restricts this device to sale by or on the order of a physician.

1.3  Warnings and Contra-Indications

- WARNING: The THERMALITE® CPAP is a respiratory heated tube designed and validated for use with the Philips Respironics DreamStation and DreamStation 2 heated humidifiers. Compatibility with other humidifiers has not been established. Do not use with other humidifiers.
- WARNING: The THERMALITE® CPAP heated tube used with parts that are not compatible with the device may degrade or interfere with the performance of the device.
- WARNING: The THERMALITE® CPAP heated tube requires a mask to prevent asphyxiation and or minimize rebreathing of carbon dioxide.
- WARNING: Compatibility of the THERMALITE® CPAP tube and the humidifier and all the components necessary to connect the device prior to use is the responsibility of the customer.
- WARNING: Do not forcibly remove the connectors attaching the THERMALITE® heated tube to the humidifier and auxiliary systems from the CPAP machine. Do not pull directly on the tubing to remove the heated tube from the CPAP machine. Always squeeze the release tabs to disconnect the THERMALITE® heated tubing from the CPAP machine.
- WARNING: To avoid malfunction and disconnection of the heated CPAP tubing, ensure that components in use follow ISO 5367 or 80601-2-74 Standards. Noncompatible components could affect the THERMALITE® heated tube performance.
- WARNING: Adding any unapproved attachments or accessories to the THERMALITE® tubing may adversely affect the performance of the heated tubing, may cause the humidifier to not function as intended by the manufacturer and may reduce the quality of CPAP therapy or cause injury to the patient.
- WARNING: Inspect the device daily for integrity and wear and tear of the tubing. Inspect for holes, deforming of the tubing and any other form of damage and replace right away if you notice any damage.
- WARNING: Avoid operation of the THERMALITE® heated tubing near heating sources such as lamps, electric blankets, heaters, etc. These additional heating sources can increase air temperature and interfere with the therapeutic process or cause harm to the patient.
- WARNING: Replace the heated tube every 90-days to prevent deterioration and or malfunction of the therapy. Using the THERMALITE® beyond 90 days may result in reduced performance of the device or harm to the patient.
- WARNING: The THERMALITE® CPAP heated tubing is not compatible with sterilization processes.
- WARNING: The THERMALITE® CPAP heated tubing is designed to be used by one patient only to prevent cross-contamination and the spread of disease. Using the THERMALITE® heated tubing on multiple patients may result in harm to the patient.
- WARNING: Avoid placing force or pressure on the THERMALITE® CPAP heated tube that could compromise the performance and integrity of the device. Do not crush the THERMALITE® tube. Damage to the heated CPAP tubing may result in decreased performance or harm to the patient.
- WARNING: Remove from use devices with physical damage such as tears, holes, kinks, exposed heating filaments, detached or missing components, or other damage that can potentially affect the device's structural integrity and performance. Attempts to repair or patch the device can compromise its performance and the safety of the patient. Do not attempt to repair heated tubing yourself if it is damaged.

- WARNING: Do not stack or combine with other equipment. This could jeopardize the performance of the device or cause harm to the patient.
- WARNING: Follow cleaning instructions for the THERMALITE® heated tubing. Do not insert cleaning tools or other objects into the device to prevent damage which can compromise device performance.
- WARNING: Avoid using this device together with or on top of other devices, including electrical sources, as it could interfere with its performance; when such a setup is physician approved, it should be monitored closely to ensure performance is not compromised and that safety is maintained.
- WARNING: Follow equipment and device instructions to prevent changes in electromagnetic emission and decreased immunity. The use of additional wiring, transducers, and accessories with the validated standard setup recommended by the manufacturer could expose the patient to additional electromagnetic emissions and or decreased immunity resulting in improper function.
- WARNING: Maintain a 12 inch (30 cm) distance between auxiliary devices such as RF Communications devices (including antenna cables and external antennas) and any part of the THERMALITE® tubing or manufacturer specified cables. Not following these instructions can lead to degradation of the performance of the heated tubing.
- WARNING: The THERMALITE® CPAP device is not compatible with MRI scanners.
- WARNING: Do not use this device if the room temperature is warmer than 35° C (95° F). If the device is used at room temperatures warmer than 35° C (95° F), the temperature of the airflow may exceed 43° C (109° F).
- CAUTION: Upon disposal of the THERMALITE® CPAP, follow local government disposal laws. When permanently disposing, label the tubing as needed to prevent cross-contamination or use by another patient.
- CAUTION: The THERMALITE® has been tested in accordance with appropriate standards for Radiated RF Emission levels so as to prevent electromagnetic interference and adverse effects to the patients and users of the heated tubing when used in accordance with the instructions. Modifications to the device could interfere with radiofrequency and electromagnetic emission compliance and potentially harm the patient. As such, do not modify the THERMALITE® device.
- CAUTION: Patients in need of CPAP treatment have a higher tendency of being immune compromised increasing their likelihood of contracting respiratory diseases. Single patient use devices that are not replaced according to the manufacturer's instructions may be a potential source of infection. The device is to be kept patient-specific, replaced within the 90-day time limit, cleaned between uses, and maintained accordingly to minimize and prevent contaminants from exacerbating patients' health. Patient and hospital staff handling the device should follow aseptic protocols such as hand sanitizing, disinfection, and the use of disposable gloves to prevent additional sources of contamination prior to use and before and after the replacement of the device.
- CAUTION: THERMALITE® CPAP device should be only air dried as listed in the cleaning instructions. The use of ovens, microwaves, heating equipment, or other mechanical devices could damage the performance and life of the device. Follow cleaning instructions provided in this user manual.
- CAUTION: Operators may include patients, home healthcare operators (non-patients assisting patients in home healthcare settings) and professionals in institutional healthcare settings. To avoid exposure to materials intended for trained professionals, patients and home healthcare operators should not perform cleaning and disinfection procedures intended for institutional operators.

2.0 USE AND CARE GUIDELINES

2.1 User Instructions

Instructions in section 2.1 are suitable for patients, home operators and institutional operators.

Remove the THERMALITE® Heated Tubing from its original packaging and inspect for defects and integrity. In the event of damage contact the manufacturer for return and replacement. The device has two connection points, one to the mask and one to the equipment. The two connectors are linked by the heated flex tubing (see diagram below):

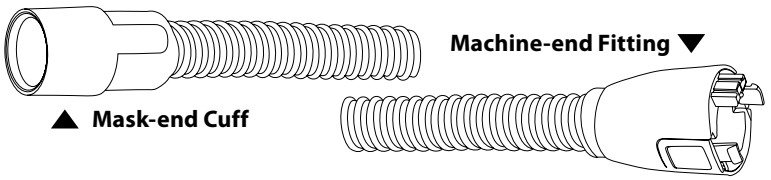

The THERMALITE® Heated Tubing connector mechanism couples with the outlet port of the CPAP Humidifier equipment. To connect the THERMALITE® tubing, align the machine end fitting of the CPAP tubing to the CPAP machine air outlet port. Then press the CPAP tubing machine end fitting adapters to the mating portion of the CPAP machine air outlet humidifier connector.

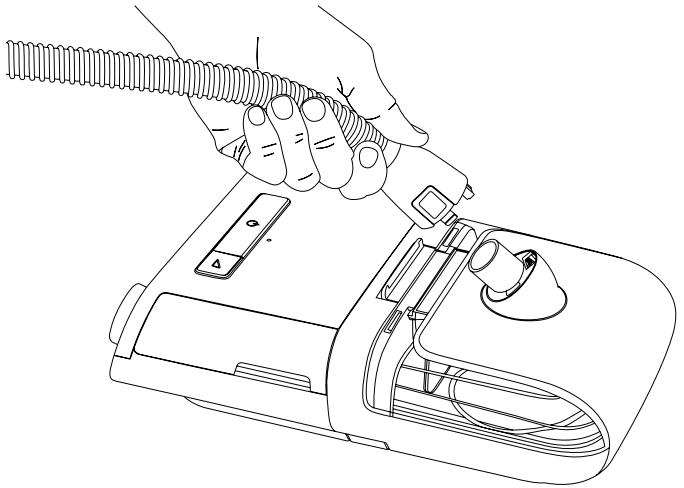

Connect the THERMALITE® Heated Tubing to the mask by aligning the mask end cuff to the mask port until the cuff is snug on the mask port. Review the device instructions. Test to ensure airflow through the tubing.

Proper placement and positioning of the mask is critical to the consistent operation of this equipment. Follow physicians and or therapist instructions on the use and placement of mask; and equipment/device instructions (Compatible Humidifiers, Mask, and THERMALITE®).

Disconnecting the heated tubing from the machine
Press the release mechanisms on the sides of the machine end fitting connected to the Humidifier equipment and pull off the air outlet port to release the THERMALITE® device.

⚠ *In order to avoid leaks in the circuit, do not pull off from the machine by pulling directly the flex tubing. This action could damage to the device or impair the performance.*

2.2 Cleaning and Disinfection instructions for the THERMALITE® Heated Tubing

Clean THERMALITE® before first use and daily while you are using the device.

2.2.1 Home Cleaning and Disinfection Process:

Instructions in section 2.2.1 are suitable for patients and home operators.

Home Cleaning Process:

1. Disconnect the THERMALITE® Heated CPAP Tubing from the CPAP mask and your CPAP machine. Do not perform cleaning or disinfection processes on the tubing when in use.
2. Using warm tap water, rinse the inside and outside of the CPAP tubing thoroughly to remove excess soil. Rinse for approximately 60 seconds.
3. Fill your sink with warm water and mild unscented liquid dish soap (2-3 gallons). Immerse the heated CPAP tubing and connectors in the soap and water and gently agitate by hand for approximately one minute using a soft bristle brush to remove any soiling.
4. Rinse your heated CPAP tube with warm water thoroughly to remove all soap residue for approximately one minute.
5. Point the connector cuffs downward and gently tap the connector cuffs to remove excess water.
6. With the connectors/cuffs pointed downward, hang your tubing to dry.
7. Allow Heated CPAP tube to air dry thoroughly before your next use.
8. Visually inspect your heated CPAP tube to make sure it is clean. Repeat the cleaning process if it is not visibly clean.
9. Inspect your heated CPAP tube for damage or wear. Discard and replace if necessary.
10. Only reuse the heated CPAP tube when fully dry.

⚠ *Do not use harsh detergents, soaps, solvents, or alcohol to clean the THERMALITE® Heated CPAP Tube. Do not clean the Heated CPAP tube in a dishwashing machine, ultrasonic cleaner, or any other cleaning device not specified in the above instructions.*

Home Disinfection Process (Optional):

1. The home disinfection process is recommended for a maximum of 60 cycles.
2. Conduct the disinfection by immersing the heated CPAP tube at 75 ± 2°C (167 ± 4°F) bath of tap water for 30 minutes.
3. After disinfection, repeat steps 5-9 of the Home Cleaning Process outlined above before use.

2.2.2 INSTITUTIONAL CLEANING AND DISINFECTION PROCEDURE

⚠ *Instructions in section 2.2.2 are suitable only for institutional operators. Do not perform cleaning or disinfection processes on the tubing when in use.*

INSTITUTIONAL CLEANING PRIOR TO DISINFECTION INSTRUCTIONS

Clean the Exceleron Medical, LLC THERMALITE® Heated CPAP tube before the first use and clean daily while using the device.

1. Disconnect the THERMALITE® Heated CPAP Tubing from the CPAP mask and the CPAP machine.
2. Using warm tap water, rinse the inside and outside of the CPAP tubing thoroughly to remove excess soil for sixty (60) seconds.
3. Fill a basin large enough to hold enough water to allow complete submersion of the device (2—3 gallons) and add an institutionally approved enzymatic cleaning solution (follow the manufacturer's instructions for dilution ratios of enzymatic soap to water). Gently using a soft bristle, remove contaminants.

   ⚠ *Be sure that you thoroughly clean all hard-to-reach surfaces such as corners and crevices.*

4. Immerse the heated CPAP tubing and connectors in clean warm water and vigorously agitate (use 2-3 gallons). Agitate for approximately 30 seconds while keeping the device submerged in water. Repeat as necessary until residual has been removed.
5. Point the connector cuffs downward and gently tap the connector cuffs to remove excess water.
6. With the connectors/cuffs pointed downward, hang your heated CPAP tubing to dry.
7. Allow Heated CPAP Tube to air dry thoroughly before your next use. Typically, the drying is conducted overnight.
8. Visually inspect your heated CPAP Tube to make sure it is clean. Repeat the cleaning process if it is not visibly clean.
9. Inspect your heated CPAP Tube for damage or wear. Discard and replace if necessary.

INSTITUTIONAL DISINFECTION INSTRUCTIONS

Chemical Disinfection

Fill a basin large enough to hold enough CIDEX OPA® to allow complete submersion of the THERMALITE® Heated CPAP tube, filling all lumens and

eliminating air pockets in CIDEX OPA solution for a minimum of 12 minutes at 20°C (68°F) or higher per the manufacturer's instructions. Once this step is complete, remove the heated CPAP tubing from the solution and thoroughly rinse following the below instructions. With the ends pointed downward, hang dry the heated tube for 24 hours.

Instructions for rinsing following chemical disinfection
Following the removal of the CPAP tubing from the CIDEX OPA solution, rinse the CPAP tubing thoroughly by immersing it completely in a large volume of sterile water, using approximately 8 liters of sterile water. Further, follow the below 5 rinsing steps:

1. Keep the CPAP tubing submerged in the sterile water for one minute.
2. Manually flush all lumens with large volumes of water following institutionally approved. processes for flushing lumens with rinse water. Use no less than 100 ml of rinse water. Rinse for approximately sixty (60) seconds.
3. Remove the CPAP tubing and discard the rinse water. Remember to always use fresh volumes of rinse water for each rinse. Do not reuse the water for rising for any other device or purpose.
4. Repeat steps 1-3 two additional times, for a total of three (3) rinses with large volumes of fresh water to remove the CIDEX OPA solution residues.
5. Always refer to the manufacturer of the disinfection user guide for additional information and cautions.

⚠ *Caution: Follow the disinfectant solution manufacturer's guidelines and instructions for use. Failure in so doing may result in inadequate disinfection of the device. Review the manufacturer's cautions and warnings.*

Note: The maximum number of disinfection procedures for the THERMALITE® Heated CPAP Tube is 60 cycles.

2.3 Troubleshooting: Consult your CPAP machine user manual.

3.0 SPECIFICATIONS/ADDITIONAL REQUIREMENTS

3.1 Storage and Transport Environment

Store and transport the device in its original package. The device packaging protects the device from sunlight damage, dirt, and other contaminants.
Storage and transport temperature range: -20° to 60°C (-4° to 140°F)
Storage and transport humidity range: 5% to 95% RH.

3.2 Operation Environment

Operating temperature range: 5° to 35°C (41° to 95°F)
Operating humidity range: 15% to 95% RH.
Operating atmospheric pressure: 79 to 101 kPa (0 to 2000 m / 0 to 6561 ft).
Allow the device to acclimate to operating temperature for an hour or more before use if stored or transported outside of the operating temperature range.

3.3 Questions and Answers

Q. Is it possible to connect the THERMALITE® Device directly to the CPAP equipment?

A. Yes, the device will work like a standard CPAP tube. However, condensation may occur.

Q. How frequently should I replace the THERMALITE® Device?

A. The THERMALITE® device is to be replaced after 90-days or per physician instructions. Replace immediately in the event of damage such as leaks and or faulty performance.

Q. THERMALITE® Device compatibility?

A. Our device is designed to be compatible with Philips Respironics DreamStation and DreamStation 2 heated humidifiers.

3.4 Part Replacement

Consult your doctor, respiratory therapist, or home health care provider in the event of device malfunction. The device use should not exceed 90-days.

3.5 Device Specifications

Components	Design
THERMALITE® hose length	6ft (1.83m)
ID (internal diameter)	15 mm
Flow resistance @30 l/min	≤ 0.04 hPa/l/m
Regulatory Compliance	ISO 5367:2014 ISO 18562-1 ISO 80601-2-70:2015 ISO 80601-2-74:2017
IP Rating	IP22 per IEC 60529: 2019
Device Compatibility with CPAP Equipment	Philips Respironics DreamStation and DreamStation 2 heated humidifiers
ISO 80601-2-74	Humidifier class II
Maximum recommended working pressure	30 cmH_2O
Output Air Temperature	16° to 30°C (60° to 86°F) (typical operating conditions), < 42.7°C (109°F) Maximum
Tubing Compliance @60 hPa (cmH2O)	≤0.7 ml/hpa (ml/cmH2O)
Electrical Power	3.3Vdc, max. 0.5A

3.6 Compliance with Standards

The THERMALITE® device complies with the requirements listed in the standards:

- ✓ IEC 60601-1 General Requirements for Basic Safety and Essential Performance of Medical Electrical Equipment.
  - Degree of Protection Against Electric Shock: Type BF Applied Part.
  - Degree of Protection against Ingress of Water: Drip Proof, IPx2.
  - Mode of Operation: Continuous.
- ✓ EN 60601-1-2 Electromagnetic Compatibility.
- ✓ ISO 80601-2-70 Sleep Apnea Breathing Therapy Equipment.
- ✓ ISO 80601-2-74 Respiratory humidifying equipment.
- ✓ ISO 18562 Parts 1-4 Biocompatibility evaluation of breathing gas pathways in healthcare applications.
- ✓ ISO 5367 Anaesthetic and respiratory equipment — Breathing sets and connectors.

3.7 Warranty

The THERMALITE® device has a manufacturing warranty of 30 days. This warranty is based on normal operating conditions of 8 hours per day.

3.8 Electromagnetic Compatibility

THERMALITE Heated CPAP Tubing has been tested as detailed in the tables below with Philips Respironics DreamStation and DreamStation 2 heated humidifiers and meets the emissions and immunity requirements of IEC 60601-1-2:2014/ AMD1:2020 when used as intended in Professional Healthcare Facility and Home Healthcare environments.

Standard compliance	Healthcare Facility	Home Healthcare
CISPR 11	Group 1 Compliant	
CISPR 11	Class B Compliant	

Immunity Test	Compliance	
IEC 61000-4-2 per IEC 60601-1-2 (Immunity to Electrostatic Discharge)	± 8 kV contact ± 2 kV, ± 4 kV, ± 8 kV, ± 15 kV air	
IEC 61000-4-2 per IEC – 60601-1-2 Clause Table 5, 6, 7 and 8 (Immunity to Conducted Disturbances Induced by RF Fields)	3 V 0.15-80 mHz 80% AM at 1 kHz	6V ISM and Amateur Radio Bands 0.15-80 mHz 80% AM at 1 kHz
IEC 61000-4-3 per IEC 60601-1-2 (Immunity to Radiated RF Fields)	3 V/m 80 MHz-2,7 GHz 80% AM at 1 kHz	10 V/m 80 MHz-2,7 GHz 80% AM at 1 kHz
IEC 61000-4-8 per IEC 60601-1-2 (Power Frequency Magnetic Field)	30 A/m 50 Hz or 60 Hz	
IEC 61000-4-39 per IEC 60601-1-2 Clause 8.11 (Immunity to Proximity Magnetic Fields)	8 A/m at 30 kHz 65 A/m at 134.2 kHz, 7.5 A/m at 13.56 mHz.	

IEC 61000-4-3 per IEC 60601-1-2 Clause 8.10 (Proximity fields from RF wireless communication equipment, Immunity test levels)

Frequency (MHz)	Modulation	Immunity Level
385	Pulse Modulation: 18Hz	27 (V/m)
450	Pulse Modulation: 18Hz	28 (V/m)
710/745/780	Pulse Modulation: 217Hz	9 (V/m)
810/870/930	Pulse Modulation: 18Hz	28 (V/m)
1720/1845/1970	Pulse Modulation: 217Hz	28 (V/m)
2450	Pulse Modulation: 217Hz	28 (V/m)
5240/5500/5785	Pulse Modulation: 217Hz	9 (V/m)

3.9 Glossary of Symbols

Symbols	Description
	Attention, see product insert for additional details.
	See user instructions.
	Manufacturer Catalogue Number.
	Manufacturer unique batch or lot traceability identifier.
	Device manufacturer.
	Date of device manufacture.
Rx only	Device requiring prescription per federal law issued by a physician.
IP22	Protected from touch by fingers and objects greater than 12 millimeters. Protected from water spray less than 15 degrees from vertical.
	Keep away from direct sunlight.
	Temperature Limit *Indicates the temperature limits to which the medical device can be exposed.*
	Humidity Limitation *Indicates the range of humidity to which the medical device can be exposed.*
	Keep dry.
	Do not use it if the package is damaged.
	Not compatible with MRI scanner, maintain away from MR areas.

Standard Referenced:
- ISO 15223-1:2021, Medical Symbols to be used with medical device labels, labeling, and information to be supplied - General requirements
- IEC 60601-1, Medical electrical equipment - General requirements for basic safety and essential performance.

Manufactured by:
Spirit Medical
5000 Township Parkway
St. Paul, MN 55110, USA

SpiritMedical.net
877-834-9279