SUNSET
HEALTHCARE SOLUTIONS

Instruction Manual

Heated CPAP Tube

for DreamStation and PR System One

TUB06HPR

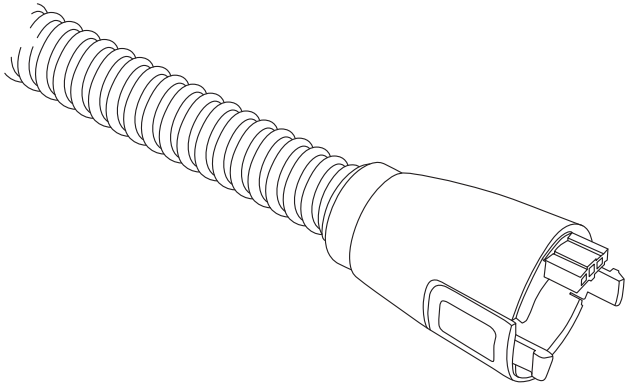

Introduction

The Sunset Heated CPAP Tube is designed to prevent condensation of humidified air during CPAP treatment, also known as “rainout.”

When combined with a heated humidifier, the Sunset Heated CPAP Tube controls humidification by ensuring that air temperature does not cool prior to inhalation. This supports comfortable and consistent treatment.

The Sunset Heated CPAP Tube is manufactured exclusively for use with the Philips Respironics DreamStation and Philips Respironics System One.

Table of Contents

1. Understanding the Heated CPAP Tube

1.1 Components....1
1.2 Indications for Use....1
1.3 Warnings and Cautions....2-3

2. Use and Care

2.1 Directions for Use....4-5
2.2 Home Cleaning and Disinfection....6
2.3 Institutional Cleaning and Disinfection....7-8
2.4 Errors and Troubleshooting....8

3. Additional Requirements

3.1 Operating Conditions....8
3.2 Storage and Transport Conditions....8
3.3 FAQ....9
3.4 Replacement Components....9
3.5 Product Specifications....10
3.6 Standards Compliance....10
3.7 Warranty....10
3.8 EMC Table....11
3.9 Symbol Glossary....12

1.1 Components

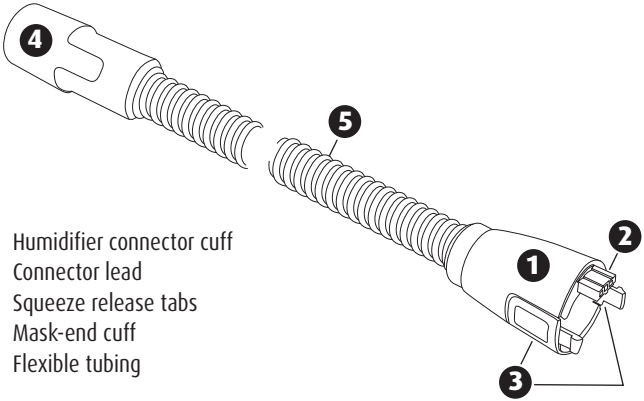

1. Humidifier connector cuff
2. Connector lead
3. Squeeze release tabs
4. Mask-end cuff
5. Flexible tubing

1.2 Indications for Use

The Sunset Heated CPAP Tube is a heated wire breathing tube intended to provide warmed and/or humidified breathing gases before they enter a patient's airway. It is indicated for single-patient reuse in the home and in clinical settings, such as hospitals, institutions, sleep laboratories, and sub-acute care facilities. It may be used with non-invasive ventilation for adult patients. It is compatible with the Philips Respironics System One Heated Humidifier and Philips Respironics DreamStation Heated Humidifier.

CAUTION: Federal law restricts this device to sale by or on the order of a physician.

1.3 ⚠ Warnings and Cautions

Please retain these instructions for use for future reference.

- WARNING: The Sunset Heated CPAP Tube is validated for use with two specific humidifiers: Philips Respironics DreamStation and Philips Respironics System One. Do not use the Sunset Heated CPAP Tube in combination with other Humidifiers.
- WARNING: The Sunset Heated CPAP Tube used with incompatible parts can result in degraded performance.
- WARNING: Failure to use a mask or accessory that minimizes rebreathing of carbon dioxide or permits spontaneous breathing can cause asphyxiation.
- WARNING: The user is accountable for the compatibility of the Sunset Heated CPAP Tube and the humidifier and all of the parts and accessories used to connect to the patient before use.
- WARNING: Always connect-disconnect the tube from the humidifier by using the grips on the cuff. Do not pull directly on the tube.
- WARNING: To prevent disconnection of the tubing or tubing system during use, only use accessories in compliance with ISO 5367 or ISO 80601-2-74.
- WARNING: Do not add any attachments to the Sunset Heated CPAP Tube, otherwise, the humidifier and its accessories might not function correctly, affecting the quality of the therapy or cause injury to the patient.
- WARNING: When used routinely, check the tube daily for holes, deformation, or any other form of damage. When damaged, replace the tube immediately.
- WARNING: Operating the Sunset Heated CPAP Tube close to other heat sources including lamps, electric blankets, etc., can cause elevated airflow temperatures that can affect the quality of the therapy or cause injury to the patient
- WARNING: The tube shall be replaced after 90 days of use. Using the Sunset Heated CPAP Tube after the maximum 90 days duration of use can affect the quality of therapy or cause injury to the patient.
- WARNING: Do not sterilize the Sunset Heated CPAP Tube.
- WARNING: The Sunset Heated CPAP Tube is for single patient reuse only. Using the Sunset Heated CPAP Tube on multiple patients can lead to contamination and injure the patient.
- WARNING: Do not subject the tube to pressure, crushing or other mechanical stresses, as damage to the tube can affect the quality of the therapy or cause injury to the patient.

- WARNING: Replace damaged (having holes, kinks, tears, exposed heating wires, etc. or is not functional) tube immediately. Do not try to repair the tube yourself. Damaged CPAP tubes can affect quality of the therapy or injure the patient.
- WARNING: Using brushes or objects to clean the inside of the tube can damage the tubing and can affect the quality of the therapy or cause injury to the patient. See cleaning instructions.
- WARNING: Use of this equipment adjacent to or stacked with other equipment should be avoided because it could result in improper operation. If such use is required, this equipment and the other equipment should be observed to verify normal operation.
- WARNING: Use of accessories, transducers, and cables other than those specified or provided by the manufacturer of this equipment could result in increased electromagnetic emissions or decreased electromagnetic immunity of this equipment and resulting in improper operation.
- WARNING: Portable RF communications equipment (including peripherals such as antenna cables and external antennas) should be used no closer than 30 cm (12 inches) to any part of the Sunset Heated CPAP Tube, including cables specified by the manufacturer. Otherwise, degradation of the performance of this equipment could result.
- WARNING: MR Unsafe and should remain outside the MRI scanner room.
- CAUTION: Dispose of the Heated CPAP Tube in accordance with your local government regulations. Upon permanent disposal, mark the tube so that it cannot be re-used by another patient.
- CAUTION: When using electrical products, always follow applicable safety precautions.
- CAUTION: The Sunset Heated CPAP Tube complies with applicable Radiated RF Emission levels to prevent adverse events to the patients and operator due to electromagnetic disturbances. In order to prevent adverse events to patient and operator due to electromagnetic disturbances do not modify or change The Sunset Heated CPAP Tube.
- CAUTION: Patients undergoing CPAP therapy may be susceptible to airway infections. Single patient reuse devices that are not replaced within the prescribed frequency may be a potential source of infection. Proper hand hygiene (e.g. hand washing or hand disinfection) is mandatory before and after replacement of the device.
- CAUTION: Do not use (microwave) ovens, fans, heating devices or any other appliances to dry the tube after washing. See cleaning instructions.

2.1 Directions for Use

The Sunset Heated CPAP Tube features a Mask-end Cuff and a Humidifier Connector Cuff.

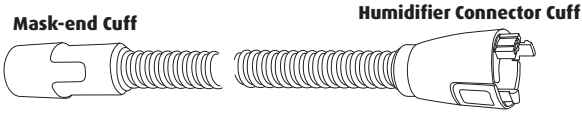

Before connecting, remove Sunset Heated CPAP Tube from packaging. Inspect tube for any damage. Discard and replace the tubing if damaged.

To Connect

Align the Sunset Heated CPAP Tube Humidifier Connector Cuff with the air outlet port on the CPAP machine humidifier. Place the Connector Lead into the mating connector located at the top of the humidifier air outlet port. Press until the tabs on each side of the connector click into place.

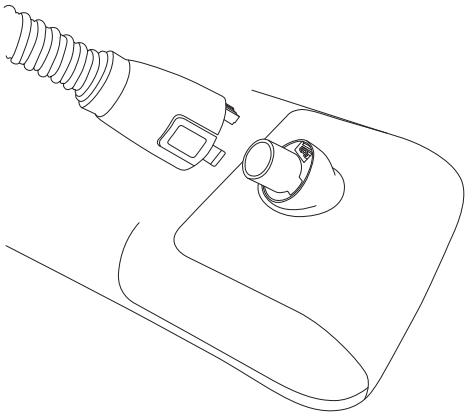

Connect the Mask-end Cuff to your mask connector. For proper placement, please consult instructions included with your mask. Ensure there is airflow through the tubing.

Apply mask and use as directed by your physician or respiratory therapist, and in accordance with the instructions in your CPAP or mask ventilator system user manual.

For extended directions for use, please refer to your DreamStation or PR System-One CPAP humidifier manual.

To Disconnect

Lightly squeeze Release Tabs on side of Humidifier Connector Cuff and carefully disconnect from air outlet port.

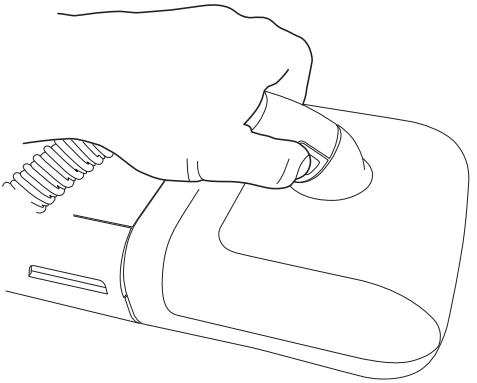

⚠ Caution: To avoid circuit leaks, do not pull or stretch tubing.

2.2 Home Cleaning & Disinfection

Home Cleaning

Clean Sunset Heated CPAP Tube before first use and daily during use.

1. Disconnect Heated CPAP Tube from CPAP machine and mask.
2. Thoroughly rinse inside and outside of Heated CPAP Tube with cold tap water to remove excess soil.
3. Gently wash Heated CPAP Tube and connectors by immersing in a solution of warm water and mild unscented liquid dish soap, gently agitating by hand and using a soft bristle brush to remove contaminants.
4. Thoroughly rinse Heated CPAP Tube with clean water to remove all soap residue.
5. With connector cuffs directed down, toward the floor, gently tap connector cuffs to remove excess water.
6. Hang Heated CPAP Tube with connector cuffs directed downward, towards the floor, for drying.
7. Allow Heated CPAP Tube to air dry thoroughly prior to next use.
8. Visually inspect Heated CPAP Tube for cleanliness. Repeat cleaning process if not visually clean.
9. Inspect Heated CPAP Tube for damage or wear. Discard and replace if necessary.

⚠ Caution: Do not use harsh soaps, detergents, solvents, or alcohols to clean the Sunset Heated CPAP Tube. Do not attempt to clean Heated CPAP Tube in a dishwasher, ultrasonic cleaner or any other cleaning device.

Only reuse the Heated CPAP Tube when fully dry.

Home Disinfection

The disinfection procedure described is recommended for a maximum of 60 cycles.

Thermal Disinfection (Pasteurization)

Immerse Heated CPAP Tube in 75°C ± 2°C (167°F) water bath for 30 minutes.

Post Disinfection

Repeat steps 5-9 of the *Home Cleaning* procedure prior to use.

2.3 Institutional Cleaning & Disinfection

Institutional Cleaning Prior to Disinfection

Clean Sunset Heated CPAP Tube before first use and daily during use.

1. Disconnect Heated CPAP Tube from CPAP machine and mask.
2. Thoroughly rinse inside and outside of Heated CPAP Tube with cold tap water to remove excess soil.
3. Gently wash Heated CPAP Tube using an institutionally approved enzymatic cleaning solution and a soft bristle brush to remove contaminants.

   ⚠ Caution: Be sure all hard to reach surfaces, corners and crevices have been thoroughly cleaned.
4. Thoroughly rinse Heated CPAP Tube by submersing in clean water and vigorously agitating. Repeat as necessary until all residue has been removed.
5. With connector cuffs directed downward, toward the floor, gently tap connector cuffs to remove excess water.
6. Hang Heated CPAP Tube with connector cuffs directed downward, toward the floor, for drying.
7. Allow Heated CPAP Tube to air dry.
8. Visually inspect Heated CPAP Tube for cleanliness. Repeat cleaning process if not visually clean.
9. Inspect Heated CPAP Tube for damage or wear. Discard and replace if necessary.

Institutional Disinfection

The disinfection procedures described below are recommended for a maximum of 60 cycles.

Thermal Disinfection (Pasteurization)

Immerse Heated CPAP Tube in 75°C ± 2°C (167°F) water bath for 30 minutes.

Chemical Disinfection

Immerse device completely in CIDEX® OPA, filling all lumens and eliminating air pockets, in CIDEX® OPA Solution for a minimum of 12 minutes at 20°C (68°F) or higher to destroy all pathogenic microorganisms. Remove device from the solution and rinse thoroughly following the rinsing instructions on next page.

Rinsing Instructions

Following removal from CIDEX® OPA Solution, thoroughly rinse the medical device by immersing it completely in a large volume (e.g. 8 liters) of sterile water.

- Keep the device totally immersed for a minimum of 1 minute.
- Manually flush all lumens with large volumes (not less than 100ml) of rinse water.
- Remove the device and discard the rinse water. Always use fresh volumes of water for each rinse. Do not reuse the water for rinsing or any other purpose.
- Repeat the procedure TWO (2) additional times, for a total of THREE (3) RINSES, with large volumes of fresh water to remove CIDEX® OPA Solution residues.
- Refer to the disinfectant solution manufacturer's instructions for use for additional information and cautions.

⚠ Caution: Follow disinfectant solution manufacturer's instructions for use. Failure to do so may result in inadequate disinfection. Review all manufacturer cautions and warnings.

2.4 Errors and Troubleshooting

Consult your CPAP machine user manual.

3. Additional Requirements

3.1 Environmental Operating Conditions

- Ambient Temperature: 41°F – 86°F (5°C – 30°C)
- Relative humidity: 5% – 95%
- Altitude: less than 6,561 feet (2,000 meters)

3.2 Storage and Transport Conditions

Environmental conditions for transport and storage:

This device should be transported and stored in its original packaging and protected from direct sunlight, dust, or any other form of contamination. . Temperature during storage and transport should not exceed 140°F (60°C) or fall below -4°F (-20°C) with Relative humidity can range from 5 % to 95%.

3.3 Frequently Asked Questions

Question: Can I connect the heated tube directly to the CPAP machine?

Answer: Yes, the tubing will act like a standard CPAP tube. However, rainout might occur.

Question: When do I replace my Sunset Heated CPAP Tube?

Answer: The heated tubing is intended to be replaced every 3 months, or according to your provider's recommended schedule. If damaged, leaking or malfunctioning, replace your heated tube immediately.

Question: With what humidifiers or flow generators can I use my Sunset Heated CPAP Tube?

Answer: The Sunset Heated CPAP Tube is designed specifically for use with the Respironics DreamStation and Philips Respironics System One.

3.4 Replacement Components

Please ask your physician, respiratory therapist, or home care provider for advice on replacement schemes. The Sunset Heated CPAP Tube should not be used for longer than 3 months.

3.5 Product Specifications

Description	Specification
Sunset Heated CPAP Tube Length	6ft (1.83m)
Internal Diameter	19mm
Flow resistance @60 l min-1	≤ 0.1 kPa
Tubing Compliance Standards	ISO 5367:2000 ISO 8185:2007 ISO 80601-2-70:2015 ISO 80601-2-74:2017
Water resistance	IP22
Compatible CPAP Machine Humidifiers	• Philips Respironics DreamStation • Philips Respironics System One
Periodic visual safety inspections that should be performed by the OPERATOR	Daily
HUMIDIFIER classification according to the ISO 80601-2-74	Humidifier classification: 2

3.6 Standards Compliance

This device is designed to conform to the following standards:

- IEC 60601-1 General Requirements for Basic Safety and Essential Performance of Medical Electrical Equipment
- EN 60601-1-2 Electromagnetic Compatibility
- ISO 80601-2-70 Sleep Apnea Breathing Therapy Equipment
- ISO 80601-2-74 Respiratory humidifying equipment

IEC 60601-1 Classification

- Degree of Protection Against Electric Shock: Type BF Applied Part
- Degree of Protection against Ingress of Water: Drip Proof, IPx2
- Mode of Operation: Continuous

Electrical

- Power Consumption 3.3 Vdc, max. 5A.

3.7 Warranty

The Sunset Heated CPAP Tube warranty is 30 days under normal operating conditions. This is based on daily usage of 8 hours.

3.8 EMC Table

Radiated RF Emission levels

Phenomenon	Immunity test levels	
	Professional healthcare facility environment	Home healthcare environment
Emissions	Compliance	
Radiated RF Emissions CISPR 11	Group 1	
Radiated RF Emissions CISPR 11	Class B	

Immunity levels

Phenomenon	Immunity test levels	
	Professional healthcare facility environment	Home healthcare environment
Immunity Test	Compliance[1]	
Electrostatic Discharge IEC 61000-4-2	± 8 kV contact	
	± 2 kV, ± 4 kV, ± 8 kV, ± 15 kV air	
Radiated Immunity IEC 61000-4-3	3 V/m 80 MHz-2,7 GHz 80% AM at 1 kHz	10 V/m 80 MHz-2,7 GHz 80% AM at 1 kHz
Power Frequency Magnetic Field IEC 61000-4-8	30 A/m 50 Hz or 60 Hz	

[1] Complies without any deviations from IEC 60601-1-2 and normative references.

Proximity fields from RF wireless communication equipment, Immunity test levels:

Frequency Range and Level: RF wireless communication equipment		
Frequency (MHz)	Modulation	Immunity Level (V/m)
Test	**Compliance[2]**	
385	Pulse Modulation: 18Hz	27
450	FM + 5Hz deviation: 1kHz sine	28
710 745 780	Pulse Modulation: 217Hz	9
810 870 930	Pulse Modulation: 18Hz	28
1720 1845 1970	Pulse Modulation: 217Hz	28
2450	Pulse Modulation: 217Hz	28
5240 5500 5785	Pulse Modulation: 217Hz	9

[2] Compliance with immunity test levels specified in IEC 60601-1-2, without deviations.

3.9 Symbol Glossary

Symbol	Meaning
	Attention, consult accompanying documents
	Read instruction manual carefully
REF	Catalog item number
LOT	Batch code
	Name and address of manufacturer
	Date of manufacture
Rx only	Prescription device Caution: U.S. federal law restricts this device to sale by or on the order of a physician
IP22	Protected from touch by fingers and objects greater than 12 millimeters. Protected from water spray less than 15 degrees from vertical.
	Keep away from direct sunlight
	Keep dry
	Do not use if the package is damaged
	MR Unsafe and should remain outside the MRI scanner room.

Standard References
ISO 15223-1:2012, Medical Symbols to be used with medical device labels, labeling, and information to be supplied - General requirements
IEC 60601-1, Medical electrical equipment - General requirements for basic safety and essential performance

Sunset Healthcare Solutions
180 N Michigan Ave Ste 2000
Chicago, IL 60601
www.sunsethcs.com

E509738

IFU-00014 Rev 2.00
2021-02-01